LEGEND:

BATTERY WALL MOUNT EMERGENCY LIGHT.

NOTES:

1. _

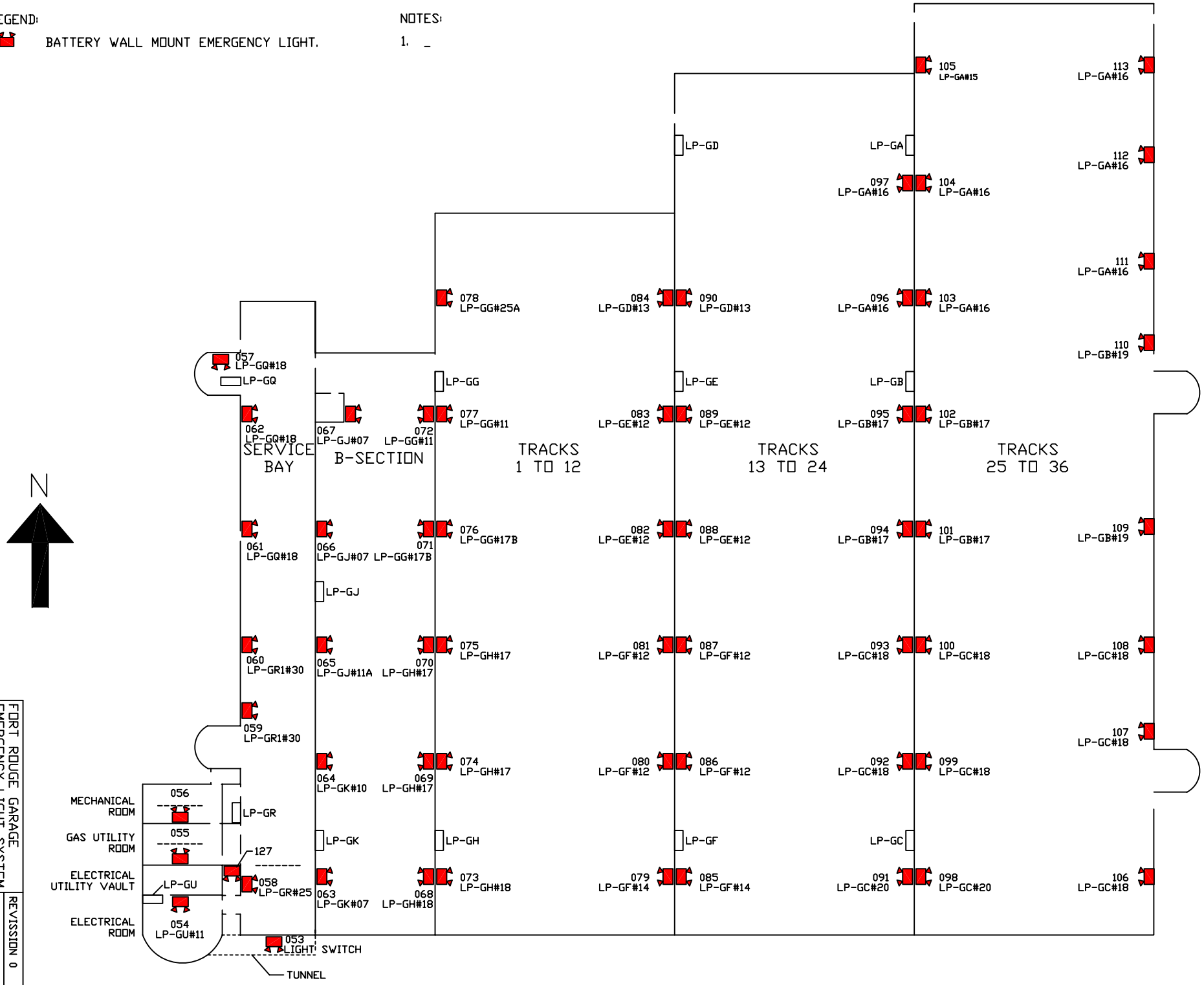

FORT ROUGE GARAGE
EMERGENCY LIGHT SYSTEM
BUILDING B
EQUIPMENT LAYOUT

REVISSION 0

REF NO FRG_212

DRAWING NO.
FRG EM_L 03